Input/Output

Md Shafiuzzaman

Generic Model of an I/O Module

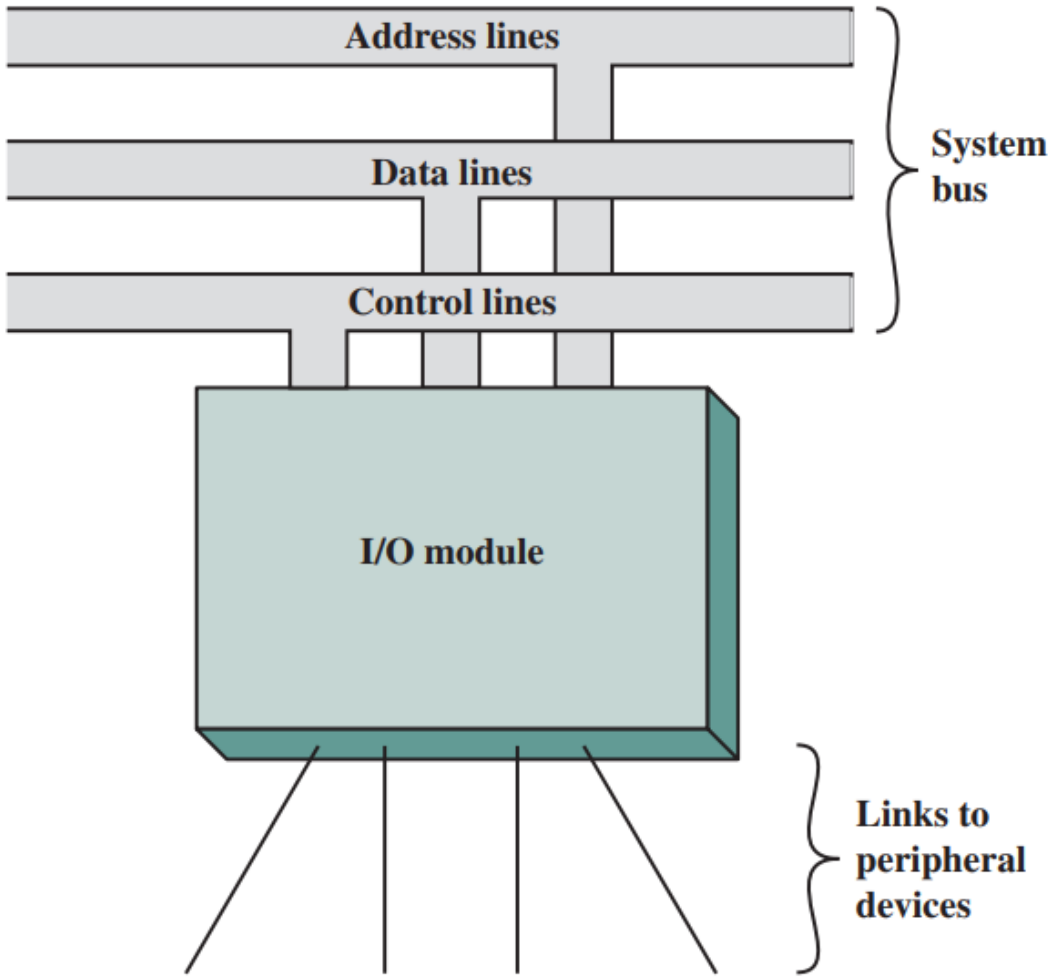

An I/O module is required. This module has two major functions:

- ✓ Interface to the processor and memory via the system bus or central switch.
- ✓ Interface to one or more peripheral devices by tailored data links.

We begin this chapter with a brief discussion of external devices, followed by an overview of the structure and function of an I/O module.

External Devices

Provide a means of exchanging data between the external environment and the computer

Attach to the computer by a link to an I/O module

- The link is used to exchange control, status, and data between the I/O module and the external device

Peripheral device

- An external device connected to an I/O module

Categories of External Devices

Human readable

- Suitable for communicating with the computer user
- Video display terminals (VDTs), printers

Machine readable

- Suitable for communicating with equipment
- Magnetic disk and tape systems, sensors and actuators

Communication

- Suitable for communicating with remote devices such as a terminal, a machine-readable device, or another computer

Block Diagram of an External Device

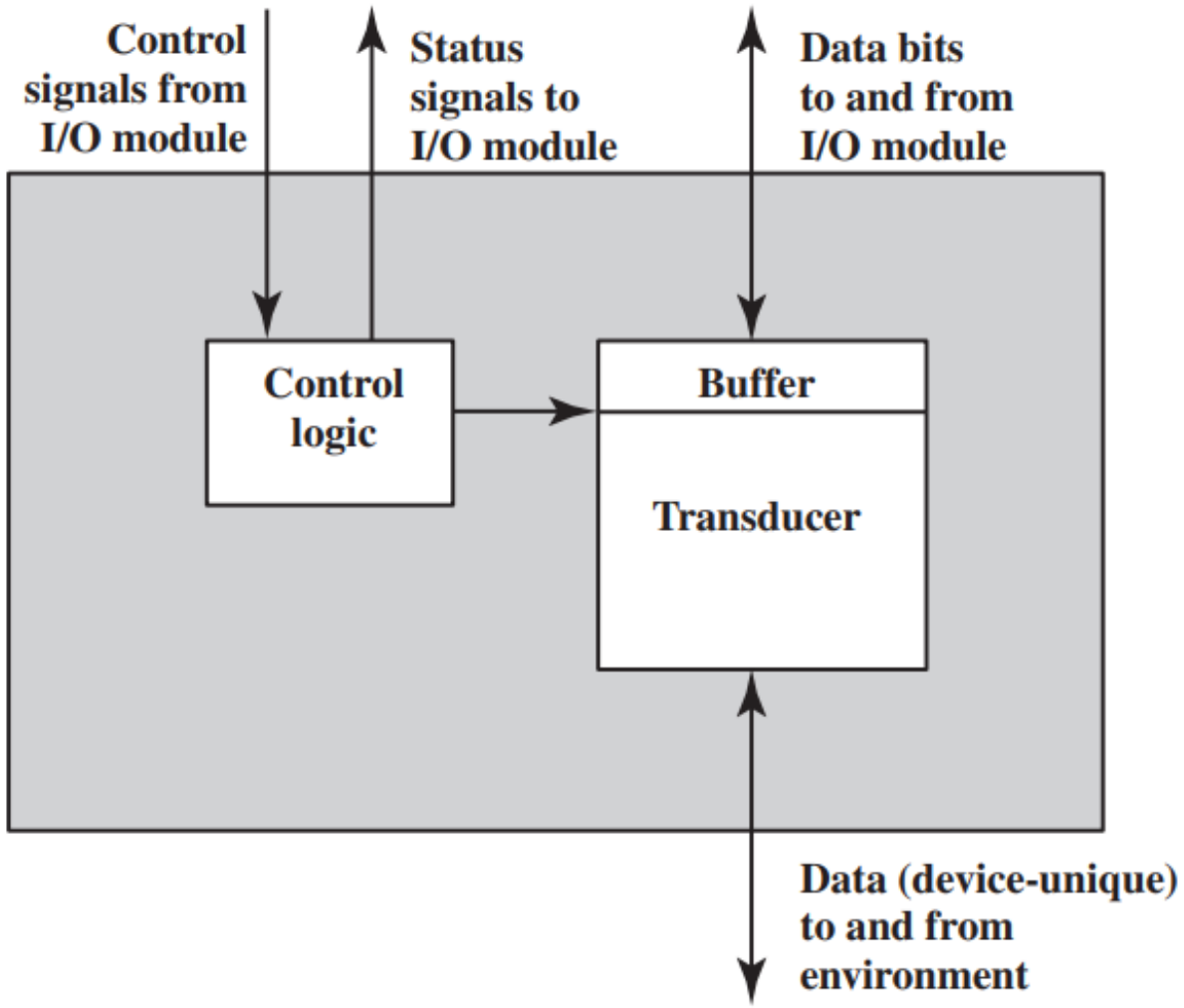

Keyboard/Monitor

- Most common means of computer/user interaction
- User provides input through the keyboard
- The monitor displays data provided by the computer

Basic unit of exchange is the character

- Associated with each character is a code.
- Each character in this code is represented by a unique 7-bit binary code 128 (2^7) different characters can be represented.

Types of Characters

Characters are of two types

Printable

- Alphabetic, numeric, and special characters that can be printed on paper or displayed on a screen

Control

- Have to do with controlling the printing or displaying of characters Example is carriage return
- Other control characters are concerned with communications procedures

Key Press Signal Interpretation and Transmission Process

User presses a key

↓

Generate electronic signal

↓

Transducer in the keyboard interprets signal

↓

Translate signal into IRA code bit pattern

↓

Transmit bit pattern to the I/O module

↓

I/O module processes the bit pattern

↓

Transmit IRA code to external device (Output stage)

↓

Transducer in external device interprets code

↓

Send electronic signals to output device

↓

Output device displays character or performs control function

Keyboard Codes

- When the user presses a key, it generates an electronic signal that is interpreted by the transducer in the keyboard and translated into the bit pattern of the corresponding IRA (International Reference Alphabet) code.
- This bit pattern is transmitted to the I/O module in the computer.
- On output, IRA code characters are transmitted to an external device from the I/O module.
- The transducer interprets the code and sends the required electronic signals to the output device either to display the indicated character or perform the requested control function.